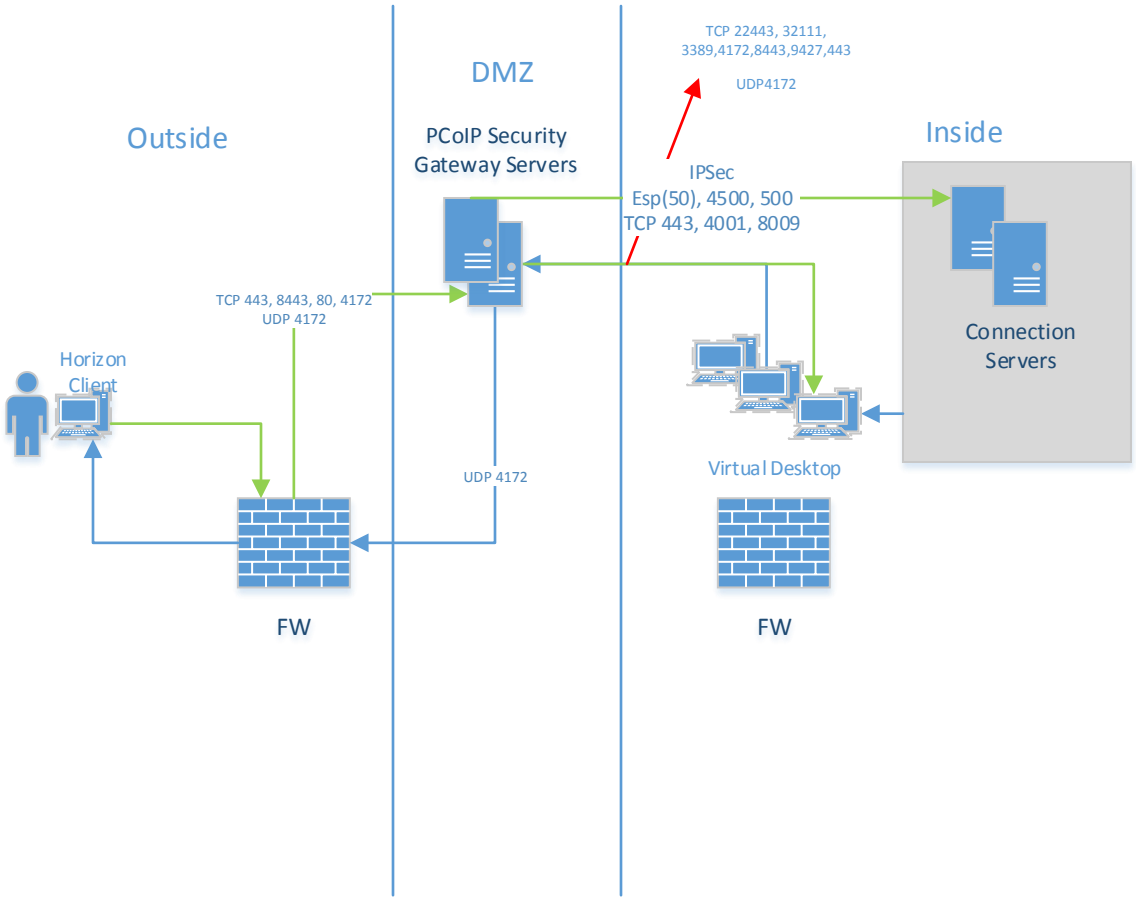
Outside
DMZ
Inside
TCP 22443, 32111,
3389,4172,8443,9427,443
UDP4172
PCoIP Security
Gateway Servers
IPSec
Esp(50), 4500, 500
TCP 443, 4001, 8009
Connection
Servers
TCP 443, 8443, 80, 4172
UDP 4172
Horizon
Client
UDP 4172
Virtual Desktop
FW
FW